Installation Instructions

725RD

Typical Installation

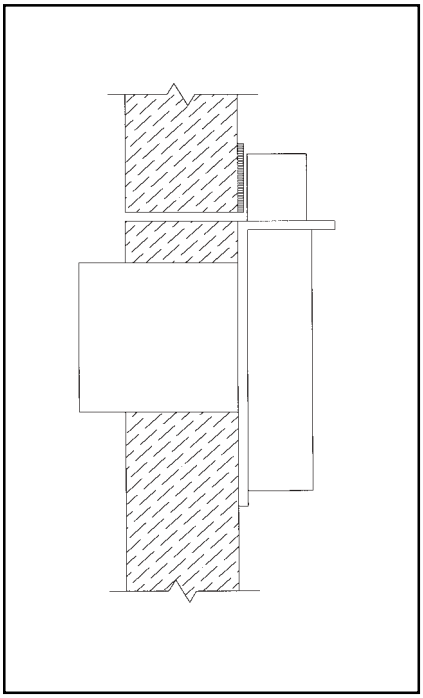

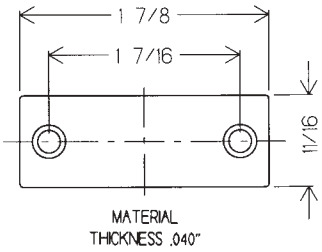

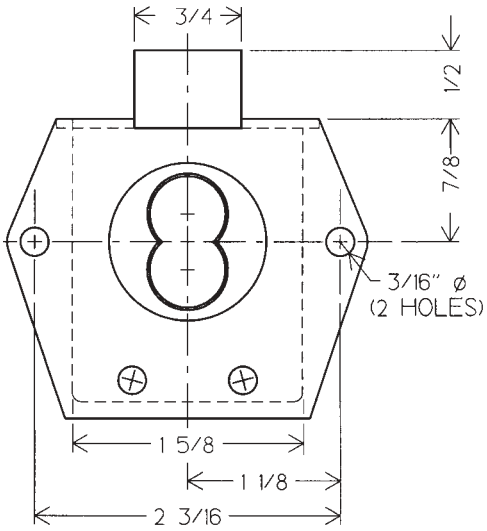

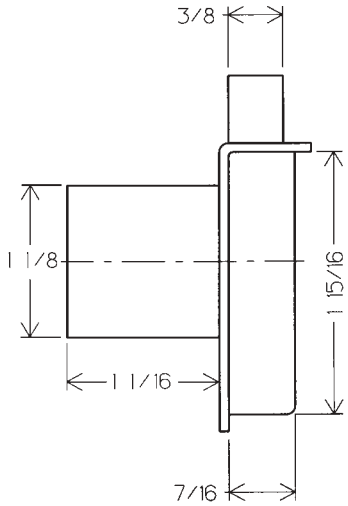

Includes

2 Mounting screws	#8 x 5/8”
2 Strike screws	#5 x 5/8”

Title				
Installation instructions for 725RD series cabinet lock				
Series	Barrel Length	Bolt type	Mounting	Revision Date
725RD	**1-1/16”**	**Deadbolt**	**Surface**	**06/2004**

OLYMPUS® LOCK, INC.